WALL END

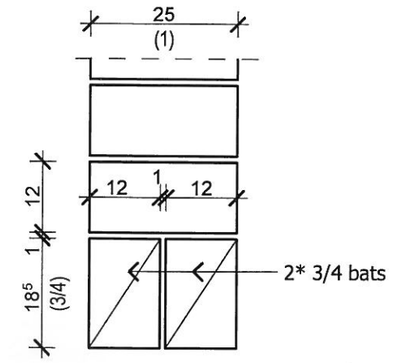

1st course

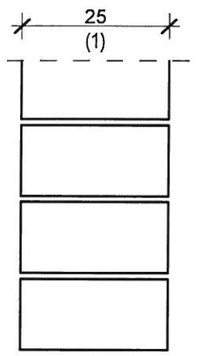

2nd course

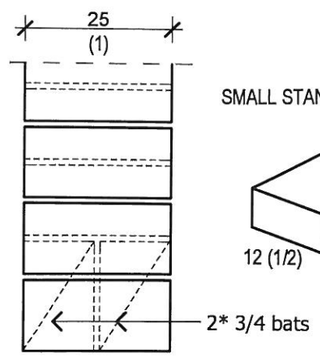

bonding

SMALL STANDARD BRICK

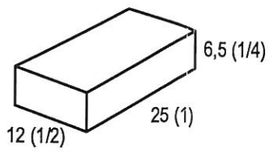

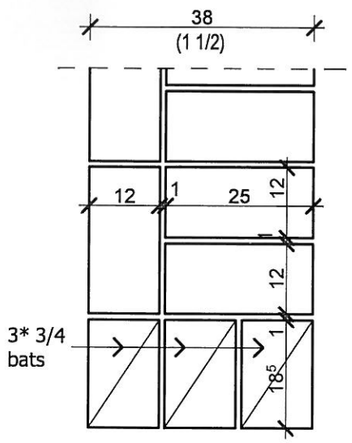

1st course

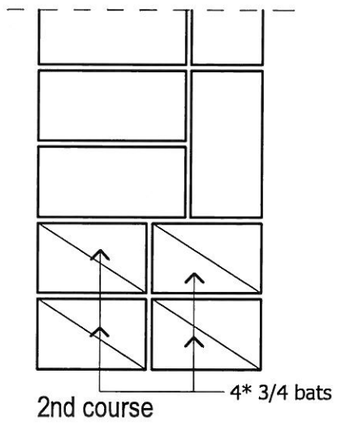

2nd course

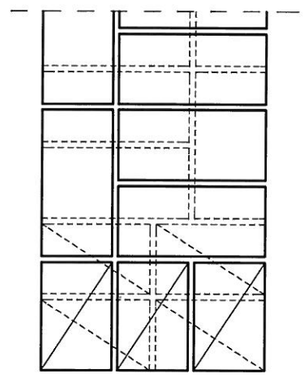

bonding

DETACHED PIERS

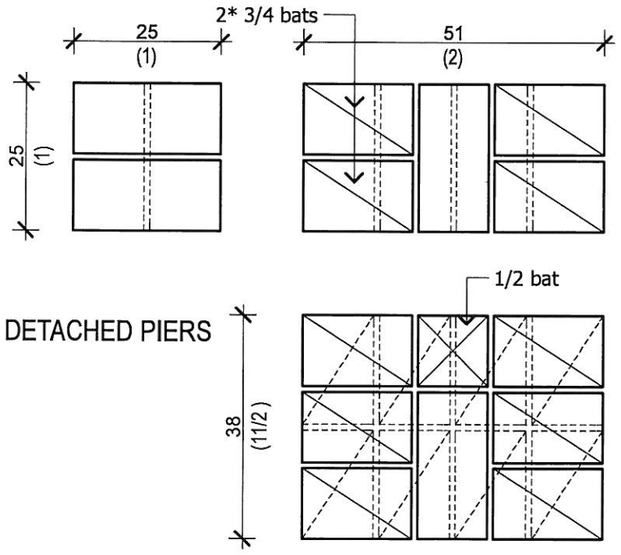

QUOIN

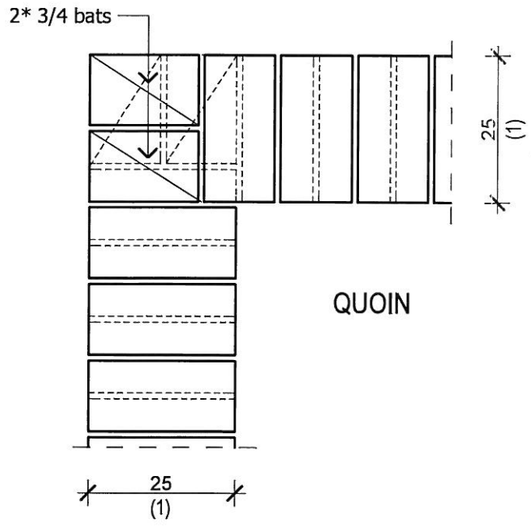

REBATE

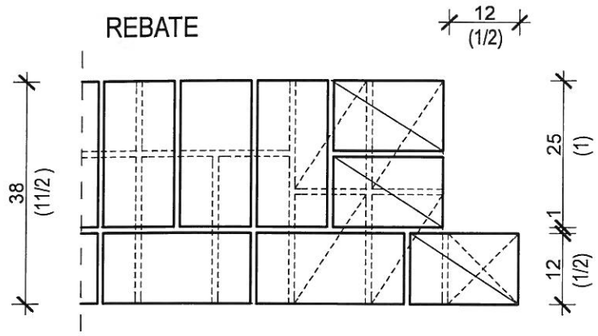

CHIMNEY

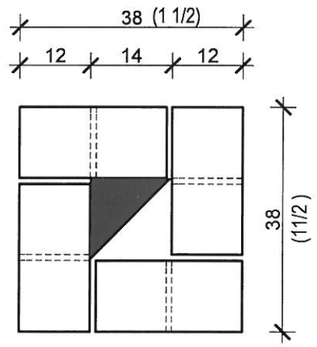

CHIMNEY (IN THE WALL)

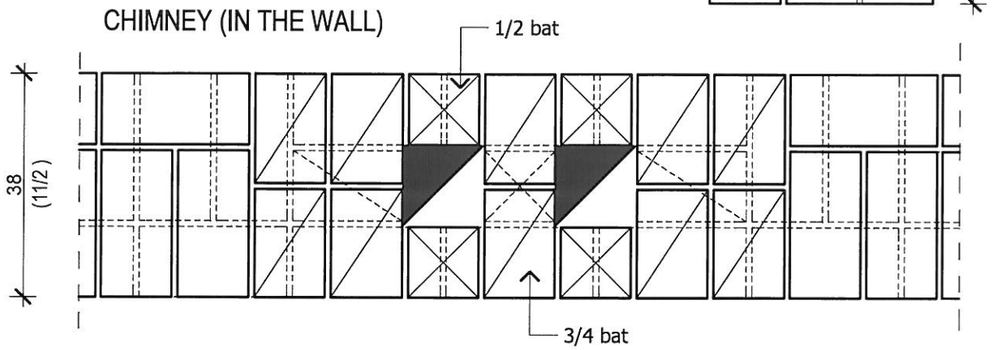

T - JUNCTION

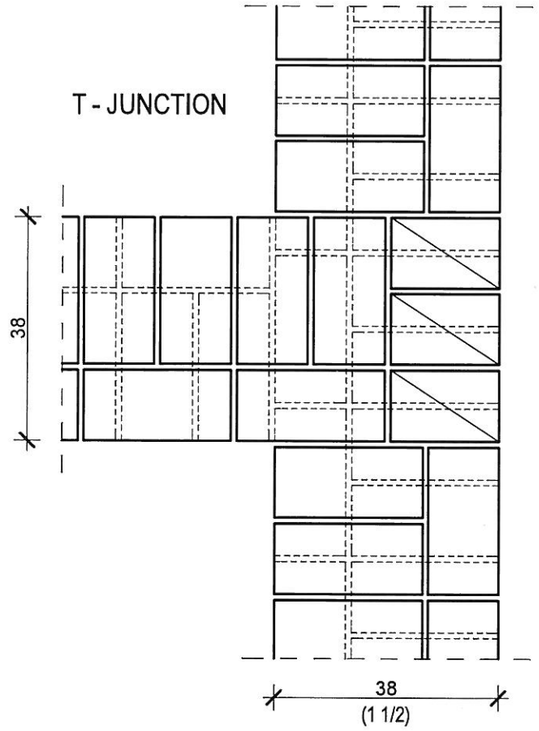

ATTACHED PIER

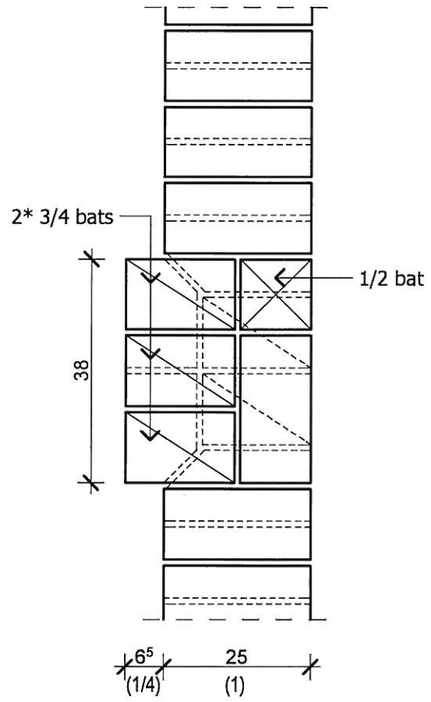

Department of Building Constructions	2008 / 09	1. Workshop excercise Brick bonding I.	name: